Half wave rectifer 半波整流

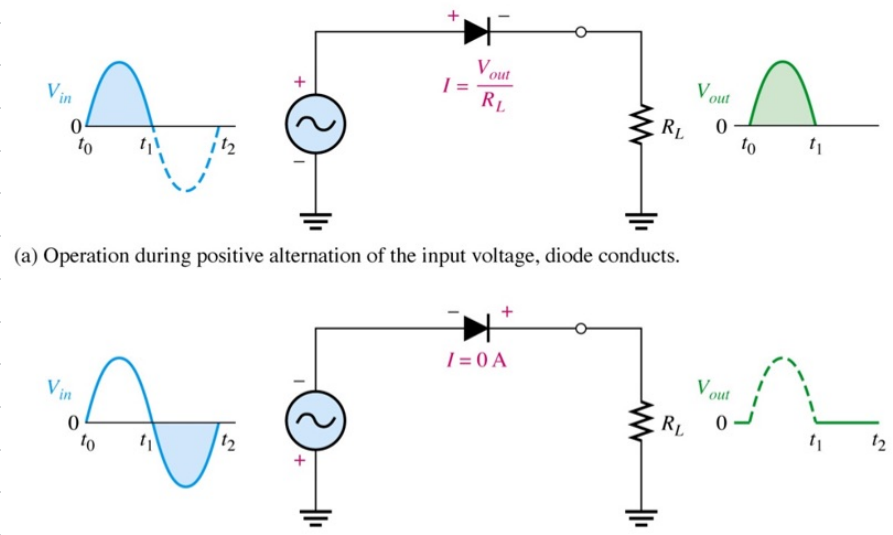

(a) Operation during positive alternation of the input voltage, diode conducts.

输出为正时，V(out) = Vin，输出为负时，由于二极管阻断，V(out) = 0

对于硅二极管，其正向压降是0.7V故对于硅二极管而言：

$$\boxed{V_p(out) = V_p(in) - 0.7}$$ 半个周期内

$$\boxed{V_{pout}(\text{平均值}) = 0.45\,V_{pin}(\text{有效值})}$$

$$\boxed{I_{pout}(\text{平均值}) = I_{pin}(\text{平均值})}$$

$$\boxed{V_{pout\,平均} = \frac{V_{in\,peak}}{\pi} = \frac{\sqrt{2}\,V_{in\,rms}}{\pi}}$$

Full wave rectifier 全波整流

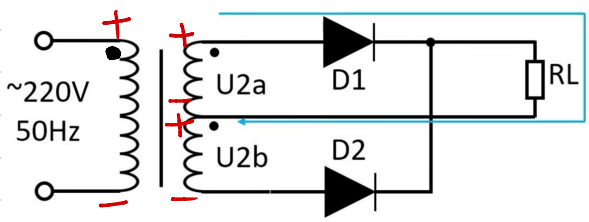

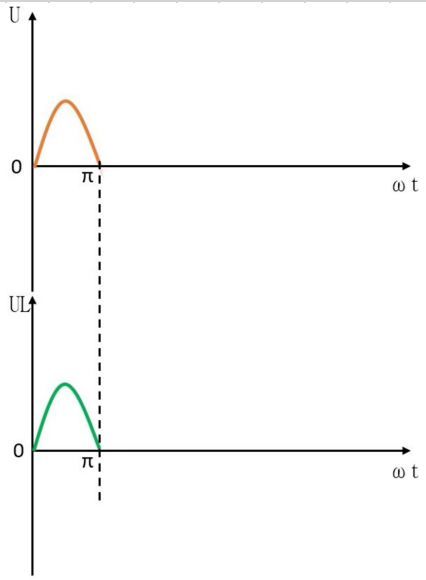

0~π内，D1导通，D2截止，RL两端电压上正下负

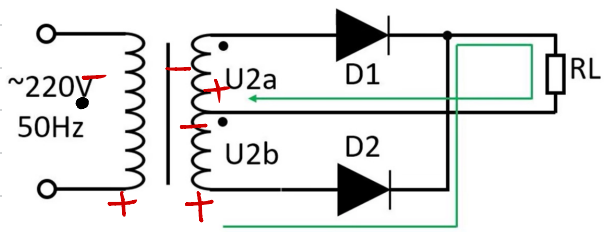

π到2π内，D2导通，D1不导通，
此时RL两端电依旧上正下负

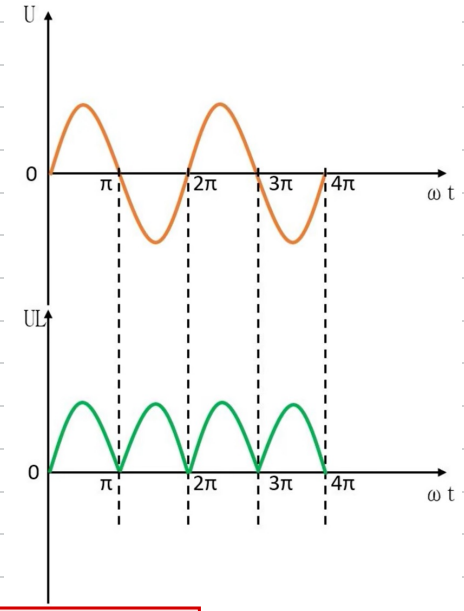

$$\boxed{V_p(out)(\text{平均值}) = 0.9\,V_p(in)(\text{有效值})}$$

$$\boxed{I_D(\text{平均值}) = \frac{1}{2} I_L(\text{平均值})}$$

$$\boxed{\text{二极管的PIV} = 2 \cdot V_p(out)}$$

$$\boxed{V_{pout}(\text{平均值}) = \frac{2V_{in\,peak}}{\pi} = \frac{2\sqrt{2} \cdot V_{in\,rms}}{\pi}}$$

Bridge Rectifier 桥式整流

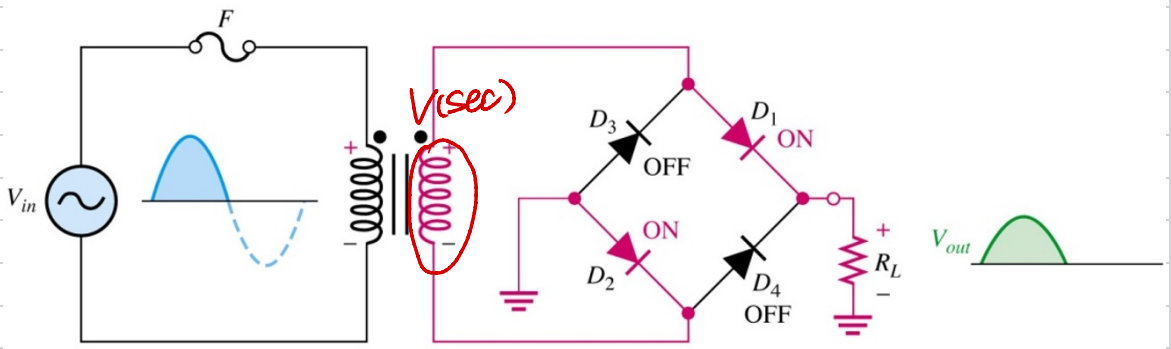

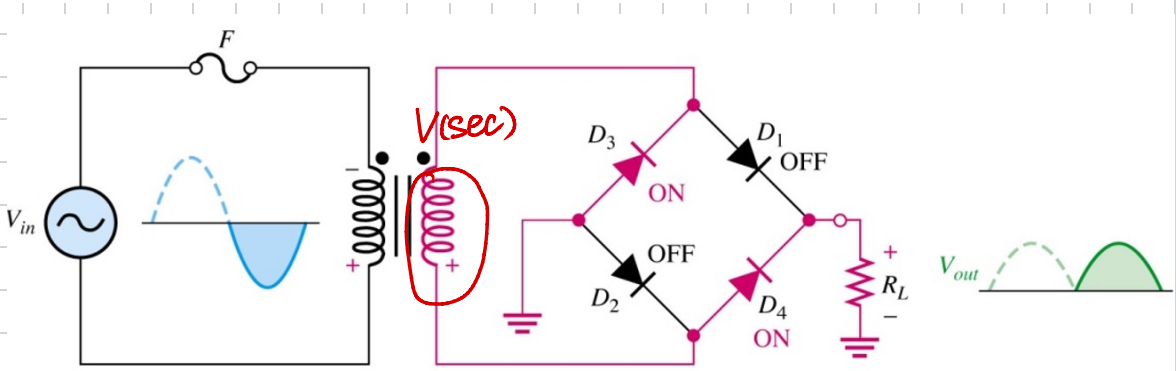

$$\boxed{V_p(out) = V(sec) - 1.4V}$$

$$\boxed{\text{二极管的PIV} = V_p(out)}$$

$$\boxed{V_p(out)(\text{平均值}) = 0.9\,V_p(in)(\text{有效值})}$$

$$\boxed{V_{pout}(\text{平均值}) = \frac{2V_{in\,peak}}{\pi} = \frac{2\sqrt{2}\cdot V_{in\,rms}}{\pi}}$$

齐纳稳压管 Zener Regulators